2015 BEARGREASE ALUMINUM FRAMESHEET

RETAILER: This framesheet MUST BE provided to the end user.

At Salsa, we believe that a sense of adventure makes life better. The bicycle can be so much more than just a bike; it's a path to new places, new people, and amazing experiences.

Thank you for your purchase. We hope it makes a good riding experience even better!

Salsa. Adventure by bike.

Thank you for purchasing a Beargrease! We want to give you important information about your bike...

⚠ **WARNING:** CYCLING CAN BE DANGEROUS. BICYCLE PRODUCTS SHOULD BE INSTALLED AND SERVICED BY A PROFESSIONAL MECHANIC. NEVER MODIFY YOUR BICYCLE OR ACCESSORIES. READ AND FOLLOW ALL PRODUCT INSTRUCTIONS AND WARNINGS INCLUDING INFORMATION ON THE MANUFACTURER'S WEBSITE. INSPECT YOUR BICYCLE BEFORE EVERY RIDE. ALWAYS WEAR A HELMET.

Intended Use: Condition 3

CONDITION	DESCRIPTION	SALSA MODELS
	This is a set of conditions for the operation of a bicycle on a regular paved surface where the tires are intended to maintain ground contact.	
	This is a set of conditions for the operation of a bicycle that includes Condition 1 as well as unpaved and gravel roads and trails with moderate grades. In this set of conditions, contact with irregular terrain and loss of tire contact with the ground may occur. Drops are intended to be limited to 15cm (6") or less.	Colossal Fargo Vaya Warbird
	This is a set of conditions for operation of a bicycle that includes Condition 1 and Condition 2 as well as rough trails, rough unpaved roads, and rough terrain and unimproved trails that require technical skills. Jumps and drops are intended to be less than 61cm (24").	Beargrease Blackborow El Mariachi Mukluk Spearfish
	This is a set of conditions for operation of a bicycle that includes Conditions 1, 2, and 3, or downhill grades on rough trails at speeds less than 40 km/h (25 mph), or both. Jumps are intended to be less than 122cm (48").	Bucksaw Horsethief
	This is a set of conditions for operation of a bicycle that includes Conditions 1, 2, 3, and 4; extreme jumping; or downhill grades on rough trails at speeds in excess of 40 km/h (25 mph); or a combination thereof.	

Frame Compatibility

Wheelsize	26" fatbike
Tire Clearance	Designed for 26 x 4.0" tires on 82mm rims
Fork	Salsa Makwa Carbon Fork included
Headset-Upper	IS44/28.6mm
Headset-Lower	IS56/40mm
Seatpost	31.6mm
Seat Collar	35.0mm; Salsa Lip-Lock included
Front Derailleur	Salsa Direct Mount clamp included, high direct mount front derailleur for 2x compact; top-pull only
Bottom Bracket	121mm PressFit
Crankset	Fatbike 1x or 2x compatible; max chainring sizes 1x (32t), 2x (36/24t)
Front Brake	74mm post mount for 160mm rotor, maximum rotor size 180mm
Rear Brake	51mm post mount for 160mm rotor, maximum rotor size 160mm
Front Spacing	142 x 15mm thru-axle
Rear Spacing	177 x 12mm thru-axle
Bottle Mounts	2 per frame sizes M–XL, 1 per frame size S
Derailleur Hanger	FS2325
Cable Routing	Full housing: external under toptube
Fork Weight w/ Uncut Steerer	730g

Frame Geometry

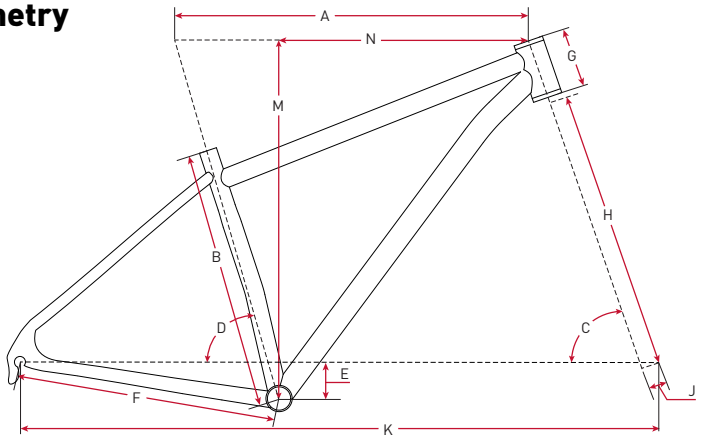

BEARGREASE ALUMINUM WITH MAKWA FORK

	X-Small	Small	Medium	Large	X-Large
Recommended Rider Height	157–168cm	165–175cm	173–183cm	180–191cm	188cm–UP
A. Toptube Effective	565	580	605	625	640
B. Seat Tube Length	381.0	381.0	432.0	483.0	533.0
C. Headtube Angle	68.4°	68.4°	68.4°	68.4°	68.4°
D. Seat Tube Angle	73°	73°	73°	73°	73°
E. BB Drop	63	63	63	63	63
F. Chainstay Length	440	440	440	440	440
G. Headtube Length	100	100	110	120	130
H. Fork Length	483	483	483	483	483
J. Fork Offset	51	51	51	51	51
K. Wheel Base	1083.6	1098.6	1124.4	1145.3	1161.1
M. Stack	590.0	590.0	599.3	608.6	617.9
N. Reach	384.6	399.6	421.8	438.9	451.1
P. Standover	682.9	708.0	746.7	781.2	818.3
All measurements in mm unless noted					

Measurements listed are based on:

- A Salsa Makwa fork which is equivalent to RockShox Bluto at 25% sag
- A 26 x 4.0" tire measuring 742mm in diameter
- Standover (P) measured vertically to top of toptube from a position 50mm forward of BB center

Please refer to the attached Alternator Dropout instructions for proper use, maintenance, and warranty information.

Additional Product and Safety Information can be found at the website: salsacycles.com/safety.

Care & Maintenance

Keep your frame clean. Dirt and road grime lead to oxidation and fading of the finish, and they make it hard to do a thorough inspection. Dirt will accelerate any abrasion of the paint that comes from rubbing, such as places where the cable housing touches the frame. In extreme cases, this type of abrasion could remove frame material.

When your bicycle is not being ridden, store it where it will be protected from rain, snow, sun, etc. Rain or snow may cause the metal on your frame to corrode. We recommend applying J.P. Weigle's Frame Saver to the inside of the tubes before the frame is assembled into a bike.

If your bicycle was exposed to moisture during a ride, thoroughly dry the bicycle before storing it. If water got inside the frame, tilt the bicycle to drain the water. If necessary, remove the seatpost and turn the bicycle upside down. This is especially critical if there is a large amount of water inside. If water freezes inside your frame, the expansion of the ice can crack and rupture the structure.

Before storing your bicycle for an extended period of time, clean and lubricate the frame with a frame wax, polish, or protectant. Do not store the bicycle near electric motors, as ozone from motors destroys paint. Before riding the bicycle again, follow the pre-ride checklist to be certain it is in good working order.

Inspection

Before every ride carefully inspect your frame for signs of fatigue. If any frame part shows signs of damage or fatigue, consult your dealer or replace the frame before riding the bicycle.

⚠ **WARNING:** An improperly modified frame, fork, or component can cause you to lose control and fall. NEVER MODIFY YOUR FRAMESET.

⚠ **WARNING:** Attaching incompatible clamping devices to a fork can lead to fork breakage, causing a loss of control. If you are not sure if a device is compatible, consult your dealer.

SERIAL NUMBER:_____

Get a pen and write down the serial number of your Salsa immediately. The number is stamped into the bottom of the bottom bracket shell. Having this number is imperative if your bike ever gets stolen or if you ever have questions about your frame...we are constantly improving our products and sometimes the serial number is the only way to tell one generation of product from another.

Salsa Cycles Limited Warranty

All Salsa products are warranted against manufacturing defects in materials and workmanship from the date of retail purchase of the product, subject to the limitations detailed below. Save your dated receipt for proof of purchase.

Five Year Warranty

- Steel frames for original owner
- Titanium frames for original owner
- Carbon frames for original owner

Three Year Warranty

- Aluminum frames for original owner
- All other Salsa bicycle forks, parts and components

This warranty applies to 2014 and newer model bicycles and covers only Salsa Cycles branded product. Any other original part or component shall be covered by the stated warranty of the original manufacturer. Any products not specifically included above are hereby omitted.

TO THE EXTENT NOT PROHIBITED BY LAW, THESE WARRANTIES ARE EXCLUSIVE AND THERE ARE NO OTHER EXPRESS OR IMPLIED WARRANTIES OR CONDITIONS INCLUDING WARRANTIES OR CONDITIONS OF MERCHANTABILITY AND FITNESS FOR A PARTICULAR PURPOSE.

For 2013 and older model bicycles and products, please consult your Owner's Manual or contact Salsa Cycles or your Salsa dealer for the applicable warranty information.

This warranty does not cover the following:

- Damage due to improper assembly or follow-up maintenance or lack of skill, competence or experience of the user or assembler
- Products that have been modified, neglected, used in competition or for commercial purposes, misused or abused, involved in accidents or anything other than normal use
- Installation of components, parts, or accessories not originally intended for use with or compatible with Salsa product
- Damage or deterioration to the surface finish, aesthetics or appearance of the product including but not limited to paint damage
- Normal wear and tear
- Labor required to remove and/or refit and re-adjust the product within the bicycle assembly
- Damage to carbon fiber caused by any carbon assembly paste

This limited warranty is expressly limited to the repair or replacement of a defective product, at the option of Salsa Cycles, and is the sole remedy of the warranty. This limited warranty applies only to the original purchaser of the Salsa Cycles product and is not transferable. This warranty applies only to Salsa Cycles products purchased through an authorized dealer or distributor. In no event shall Salsa Cycles be liable for any loss, inconvenience or damage, whether direct, incidental, consequential, or otherwise resulting from breach of any express or implied warranty or condition, of merchantability, fitness for a particular purpose, or otherwise with respect to our products except as set forth herein. This warranty gives the consumer specific legal rights, and those rights and other rights may vary from place to place. This warranty does not affect your statutory rights.

Warranty Registration:

Proof of purchase is required before a warranty claim is processed. Salsa Cycles therefore strongly encourages warranty registration at salsacycles.com. Failure to register will not affect consumer rights under the limited warranty stated above, so long as the consumer can show in a reasonable manner proof of original ownership and the date the Salsa Cycles product was purchased.

If you have any questions contact warranty@salsacycles.com

SALSA CYCLES
6400 West 105th Street, Bloomington, MN 55438
Tel: 877-MOTO-ACE Fax: 952-983-6210
www.salsacycles.com

Alternator Dropout Instructions

At Salsa, we believe that a sense of adventure makes life better. The bicycle can be so much more than just a bike; it's a path to new places, new people, and amazing experiences.

Thank you for your purchase. We hope it makes a good riding experience even better!

Salsa. Adventure by bike.®

⚠ WARNING: CYCLING CAN BE DANGEROUS. BICYCLE PRODUCTS SHOULD BE INSTALLED AND SERVICED BY A PROFESSIONAL MECHANIC. NEVER MODIFY YOUR BICYCLE OR ACCESSORIES. READ AND FOLLOW ALL PRODUCT INSTRUCTIONS AND WARNINGS INCLUDING INFORMATION ON THE MANUFACTURER'S WEBSITE. INSPECT YOUR BICYCLE BEFORE EVERY RIDE. ALWAYS WEAR A HELMET.

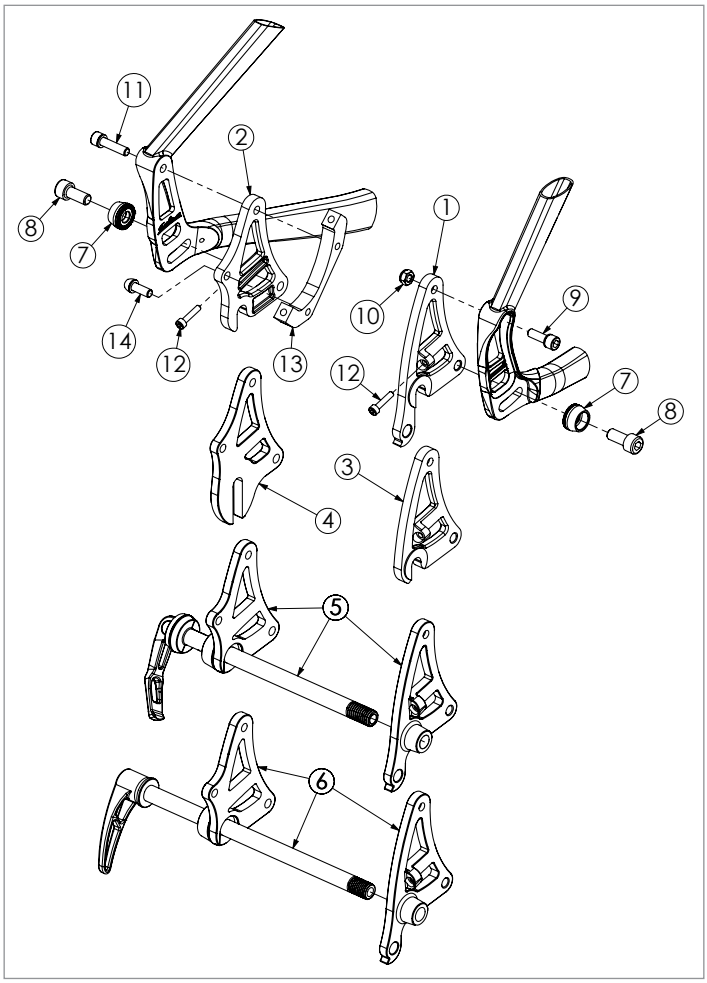

Compatibility

Alternator Dropouts are only compatible with Salsa frames designed for Alternator Dropouts. The swing plates featured on the Alternator Dropout are part of a modular design system which allows for replacement in the event of damage/loss and also to accommodate various different hub and drivetrain configurations. Available aftermarket swing plate options are:

(Refer to figure below)

1. Driveside, 10mm QR, geared
2. Non-driveside, 10mm QR
3. Driveside, 10mm QR, single-speed
4. Non-driveside, Rohloff OEM2
5. 142 x 12 thru-axle set with Rock Shox Maxle
6. 177 x 12 thru-axle set with DT Swiss RWS axle

NOTE: Due to differing thread pitch, driveside thru-axle plates are not cross compatible.

Required Tools

10mm box-end wrench

3, 5, & 6mm hex wrenches

Torque wrench with 5 & 6mm hex bits

Thread-locking compound

Hardware Kit(s)

There are 2 different hardware kits for attaching swing plates to frame plates based on frame material:
SHORT (16 & 22mm) for steel and MY13+ titanium frames, and LONG (18 & 24mm) for aluminum and 2011 and 2012 model-year Ti frames, and 2013 Mukluk Ti frames. If you're unsure, measure the thickness of your Alternator frame plate.

7. Cup washer (qty 2)
8. Swing plate fixing bolt (qty 2), M8 x 1.25, 16 or 18mm
9. Upper pivot bolt, driveside, M6 x 1.0 w/ washer, 16 or 18mm
10. Lock Nut, M6 x 1.0
11. Upper pivot bolt, non-driveside, M6 x1 .0 w/ washer, 22 or 24mm

Tension Screws

12. Set screw (qty 2) M4 x 0.7, 18mm

Not Included but Needed for Assembly

13. I.S. disc brake adaptor (per brake manufacturer's specifications.
14. Disc brake adaptor fixing bolt (per brake manufacturer's specifications)

NOTE: Alternator dropouts are not compatible with 140mm rotor/ disc brake setups.

⚠ **WARNING:** Only use hardware with the Salsa Alternator Dropout that is provided with the Alternator Dropout kit, or sold by Salsa specificially for the Alternator Dropout. Do not use any other hardware.

⚠ **WARNING:** Use only the appropriate length hardware according to frame material to attach swing plates. Using the incorrect or different length hardware could lead to damage, failure, or interference of moving parts, all of which could cause serious harm to bicycle and also to the rider.

Disc Brake Mount Installation

Tools: 5 & 6mm hex wrench, 10mm box-end wrench, thread-locking compound

1. Remove the nut used for shipping from the non-driveside upper pivot bolt. Set it aside as a spare to the driveside nut (FIG 1).
2. Mount your disc brake adapter using the same upper pivot bolt and 1 of the 2 bolts supplied with the brake adapter. Apply thread locking compound to both bolts. Secure the lower adapter bolt to the brake according to manufacturer's specification. Tighten the upper pivot bolt just enough to complete brake caliper installation. You will fully tighten it later after dropout adjustment is completed (FIG 2).
3. Install the rear brake caliper, rear wheel, and then align and secure the brake caliper to the rotor per the brake manufacturer's instructions (FIG 3).
4. Proceed to Dropout Adjustment section.

Dropout Adjustment

Tools: 3, 5, & 6mm hex wrenches

1. Slightly loosen the upper pivot bolts and the lower fixing bolts on both the driveside and non-driveside dropouts (FIG 4).
2. Install and secure the rear wheel properly into the dropouts
3. For geared setups using thru-axle or QR swing plates:
   - Push the swing plates all the way forward (FIG 5)
   - Check for adequate (~6mm min) tire clearance to the stays and front derailleur
   - If clearance is adequate, proceed to Securing Dropouts
   - If clearance is not adequate, proceed to the next step
4. For singlespeed, Rohloff, and geared setups with clearance issues:
   - Install the provided tension screws into the swing plates
   - Turn the driveside tension screw until proper chain tension is achieved and/or adequate tire clearance is reached (FIG 6)
   - Turn the non-driveside tension screw until proper wheel alignment is reached
   - Proceed to Securing Dropouts

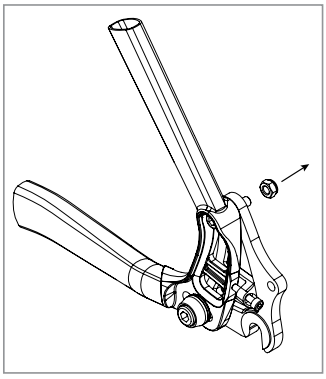
Figure 1

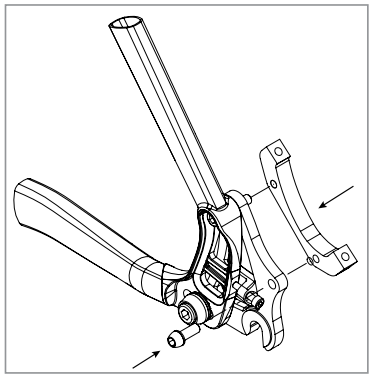
Figure 2

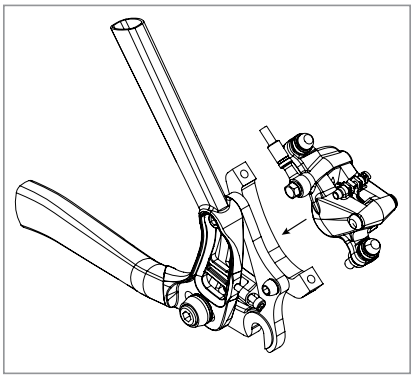
Figure 3

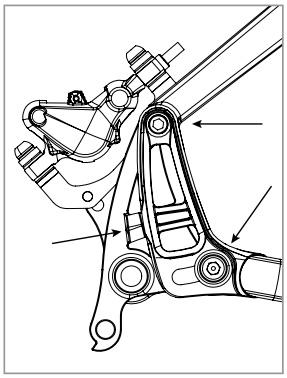
Figure 4

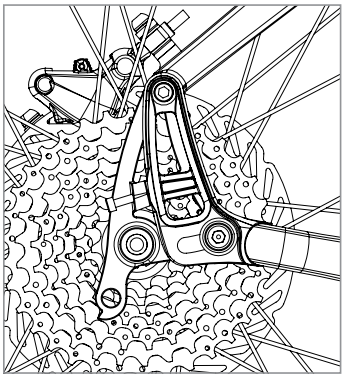
Figure 5

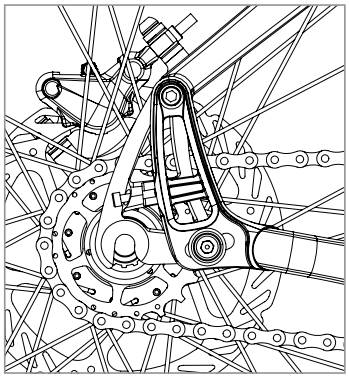
Figure 6

Securing Dropouts

Tools: 3mm hex wrench, torque wrench with 5 & 6mm hex bits

With the wheel properly installed and secured and the dropouts properly adjusted:

1. Tighten the upper fixing bolts and both lower fixing bolts to 8Nm (FIG 4).
3. If present, tighten both tension screws 1/8 turn to prevent them from rattling out during use (FIG 4).
4. Check wheel alignment and tire clearance again.
5. If applicable, check for proper chain tension again.
6. Check brake caliper alignment and security.

⚠ **WARNING:** Only use hardware with the Salsa Alternator Dropout that is provided with the Alternator Dropout kit, or sold by Salsa specificially for the Alternator Dropout. Do not use any other hardware.

⚠ **WARNING:** Use only the appropriate length hardware according to frame material to attach swing plates. Using the incorrect or different length hardware could lead to damage, failure, or interference of moving parts, all of which could cause serious harm to bicycle and also to the rider.

Warranty

Salsa Cycles warrants this new Salsa product against defects in materials and workmanship for three (3) years from the original date of retail purchase by the consumer. This limited warranty is expressly limited to the repair or replacement of the original product, at the option of Salsa Cycles, and is the sole remedy of the warranty. This limited warranty applies only to the original purchaser of the Salsa product and is not transferable. In no event shall Salsa Cycles be liable for any loss, inconvenience or damage, whether direct, incidental or consequential or otherwise resulting from breach of any express or implied warranty or condition, of merchantability, fitness for a particular purpose, or otherwise with respect to this product except as set forth herein.

This warranty does not cover the following:

- Damage due to improper assembly or follow-up maintenance or lack of skill, competence or experience of the end user
- Products that have been modified, neglected, used in competition or for commercial purposes, misused or abused, involved in accidents or anything other than normal use
- Damage or deterioration to the surface finish, aesthetics or appearance of the product
- Normal wear and tear
- Labor required to remove and/or refit and re-adjust the product within the bicycle assembly

TO THE EXTENT NOT PROHIBITED BY LAW, THESE WARRANTIES ARE EXCLUSIVE AND THERE ARE NO OTHER EXPRESS OR IMPLIED WARRANTIES OR CONDITIONS INCLUDING WARRANTIES OR CONDITIONS OF MERCHANTABILITY AND FITNESS FOR A PARTICULAR PURPOSE.

SALSA CYCLES
6400 West 105th Street, Bloomington, MN 55438
Tel: 877-MOTO-ACE Fax: 952-983-6210
www.salsacycles.com

3150 10/13